12A4RS125

12 Foot Round Straight Aluminum Light Pole, 4 Inch Diameter, 0.125 Inch Wall Thickness

PRODUCT DESCRIPTION

Pole Top Options: Poles are provided with either a removable top cap or a welded aluminum tenon. A 2 3/8 inch outside diameter tenon with 4 inches in length is the most common; however, other tenon options are available. Customers should confirm the appropriate tenon size required by their project prior to ordering. Poles with a top cap can also be drilled during fabrication. The drill pattern and orientation need to be provided by the customer unless Energy Light fixtures are being used for the project.

Pole Shaft: The pole shaft will be constructed of seamless extruded tube of 6063 aluminum alloy per the requirements of ASTM B221. The shaft assembly shall be full-length heat treated after base weld to produce a T6 temper.

Handhole: A reinforced handhole with grounding provision is provided at 18 inches from the base end of the pole assembly. Each handhole includes a cover and the attachment hardware.

Base & Bolt Covers: A 4-bolt cast aluminum base flange of alloy 356-T6 with aluminum bolt covers and stainless steel hex head attaching screws.

Anchor Bolts: A set of 4 galvanized steel anchor bolts is provided with each pole assembly. Each bolt includes 2 nuts and 2 washers. A portion of the anchor bolt is threaded for securing and leveling the pole with the provided nuts and washers. An actual size paper anchor bolt template is provided.

Color and Finish Options: The standard finish for our round straight aluminum light poles is a natural aluminum finish. Our poles are also available with a commercial grade, powder coat finish for an additional charge. Standard color options include dark bronze, black, gray, green, and white; however, custom color options are also available.

Other Options: The following options are available for an additional charge. Please consult one of our light pole experts for details: Vibration dampener, custom tenon size, custom color, electric/GFI outlet, custom pole height, additional handhole, UL compliant handholes and custom base plate dimensions.

Specification Table		
Mounting Height (ft.)	A	12
Wall Thickness (in.)	B	0.125
Top Diameter (in.)	C	4
Butt Diameter (in.)	D	4
Handhole (in.)	E	2 x 4
Base Width (in.)	F	7.5
Bolt Circle (in.)	G	7.25
Bolt Projection (in.)	H	2
Anchor Bolt Size (in.)	I	0.75 x 17 x 3
Bolt Circle Range (in.)	-	6.5-8

Maximum EPA with 1.3 Gust Factor:		
90 mph:	6.0	Square Feet
100 mph:	4.4	Square Feet
120 mph:	3.1	Square Feet
130 mph:	2.3	Square Feet

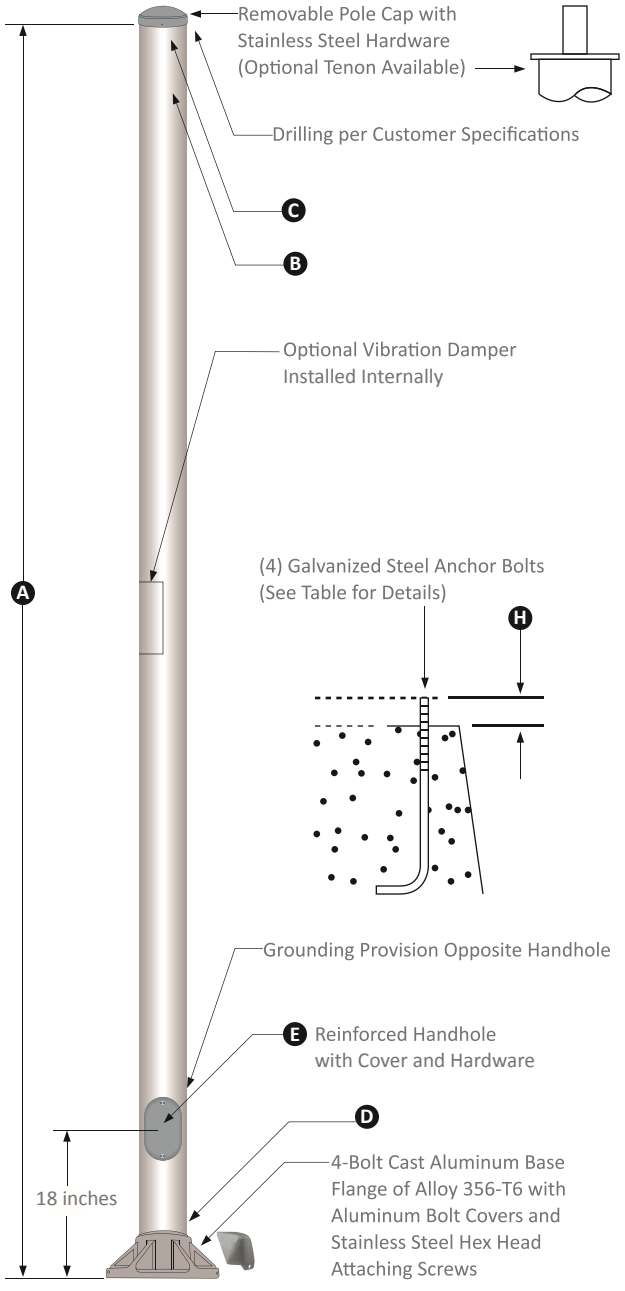

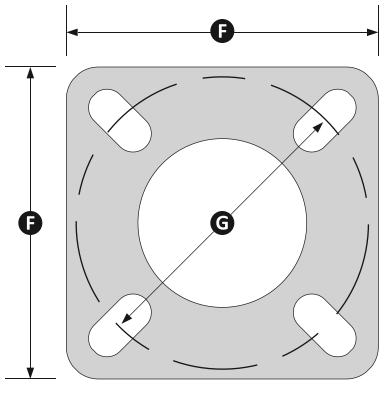

Base Plate

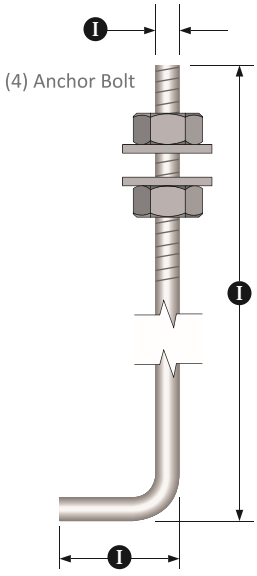

Copyright © 2019 Energy Light, Inc. All Rights Reserved. | 800 E. Northwest Highway, Palatine, IL 60074