H25A5SS250

25 Foot Hurricane Resistant Square Aluminum Pole, 5 Inch Wide, 0.250 Inch Wall Thickness

Product Description

- **Pole Top Options:** Poles are provided with either a removable top cap or an aluminum tenon. A 2 3/8 inch outside diameter tenon with 4 inches in length is the most common; however, other tenon options are available. Customers should confirm the appropriate tenon size required by their project prior to ordering. Poles with a top cap can also be drilled during fabrication. The drill pattern and orientation need to be provided by the customer, unless our fixtures are being used for the project..
- **Material:** Our square aluminum poles are constructed from seamless extruded aluminum alloy and meet ASTM B221 requirements. Our aluminum light poles are designed per American Association of State Highway & Transportation Officials (AASHTO) standards and meet all applicable material ASTM standards. All welders are American Welding Society (AWS) certified.
- **Handhole:** The handhole is located 18 inches above ground. A handhole cover and two (2) stainless steel self-tapping attaching screws are included. A grounding provision incorporating a tapped 1/4 inch-20NC is provided opposite the handhole.
- **Anchor Bolts:** This light pole includes four (4) L-shaped, fully galvanized anchor bolts conforming to AASHTO M314-90 meeting Grade 55 standards. Galvanized hardware consisting of four (4) hex nuts, four (4) lock washers and four (4) flat washers as well as one (1) paper anchor bolt template are included. For your convenience, anchor bolts can be pre-shipped for a nominal surcharge.
- **Base:** A base flange of alloy 356-T6 with snap-in bolt covers

MADE IN USA | FREE SHIPPING | 10 YEAR WARRANTY

Specification Table		
Mounting Height (ft.)	A	25
Wall Thickness (in.)	B	0.250
Top Diameter (in.)	C	5
Butt Diameter (in.)	D	5
Base Width (in.)	E	11.25
Bolt Circle (in.)	F	11
Bolt Projection (in.)	G	2
Anchor Bolt Size (in.)	H	0.75 x 30 x 3
Handhole Cover (in.)	I	2 x 4
Bolt Circle Range (in.)	-	10.5-11.5

Maximum EPA with 1.3 Gust Factor:		
120 mph:	4.2	Square Feet
130 mph:	2.8	Square Feet
140 mph:	1.6	Square Feet
150 mph:	0.6	Square Feet

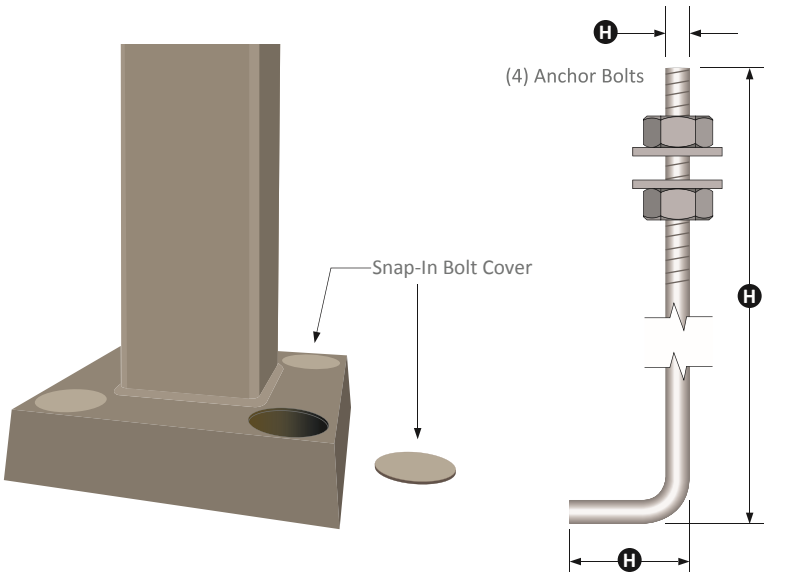

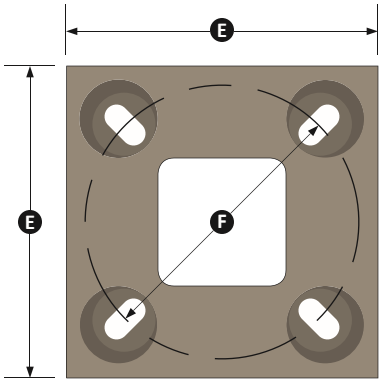

Base Plate with Snap-In Bolt Covers

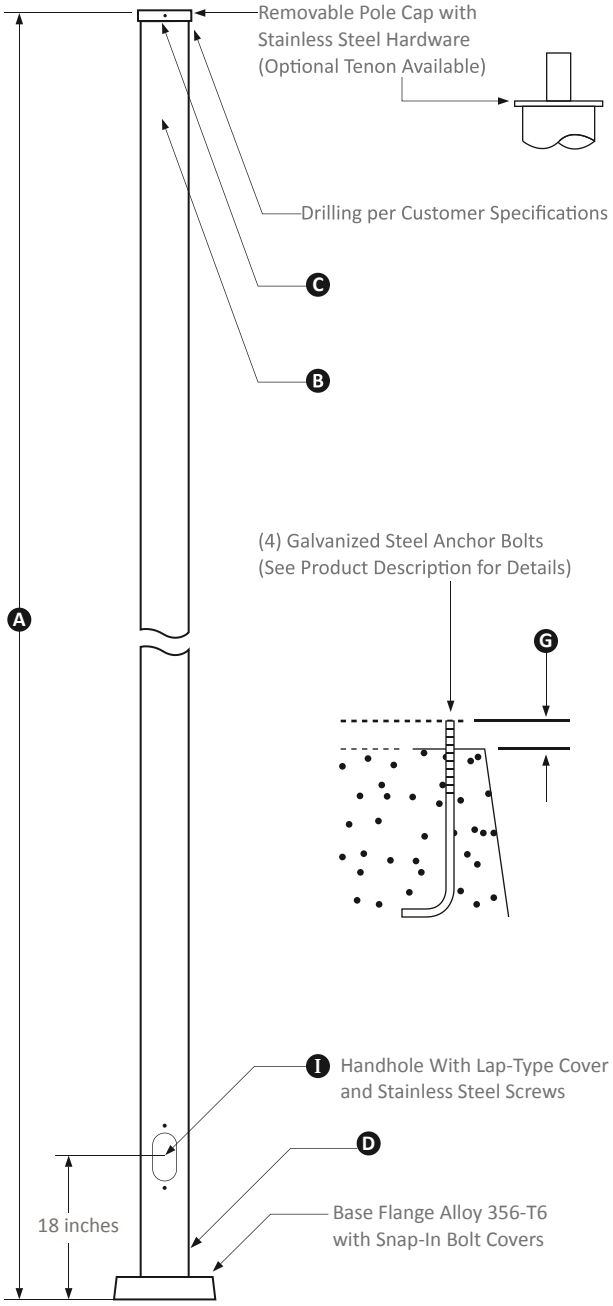

Copyright © 2019 Energy Light, Inc. All Rights Reserved. | 800 E. Northwest Highway, Palatine, IL 60074