8 ft. Double Tie-Rod Wood Pole Bracket. 1-1/4 inch Steel Pipe. #WPB1053

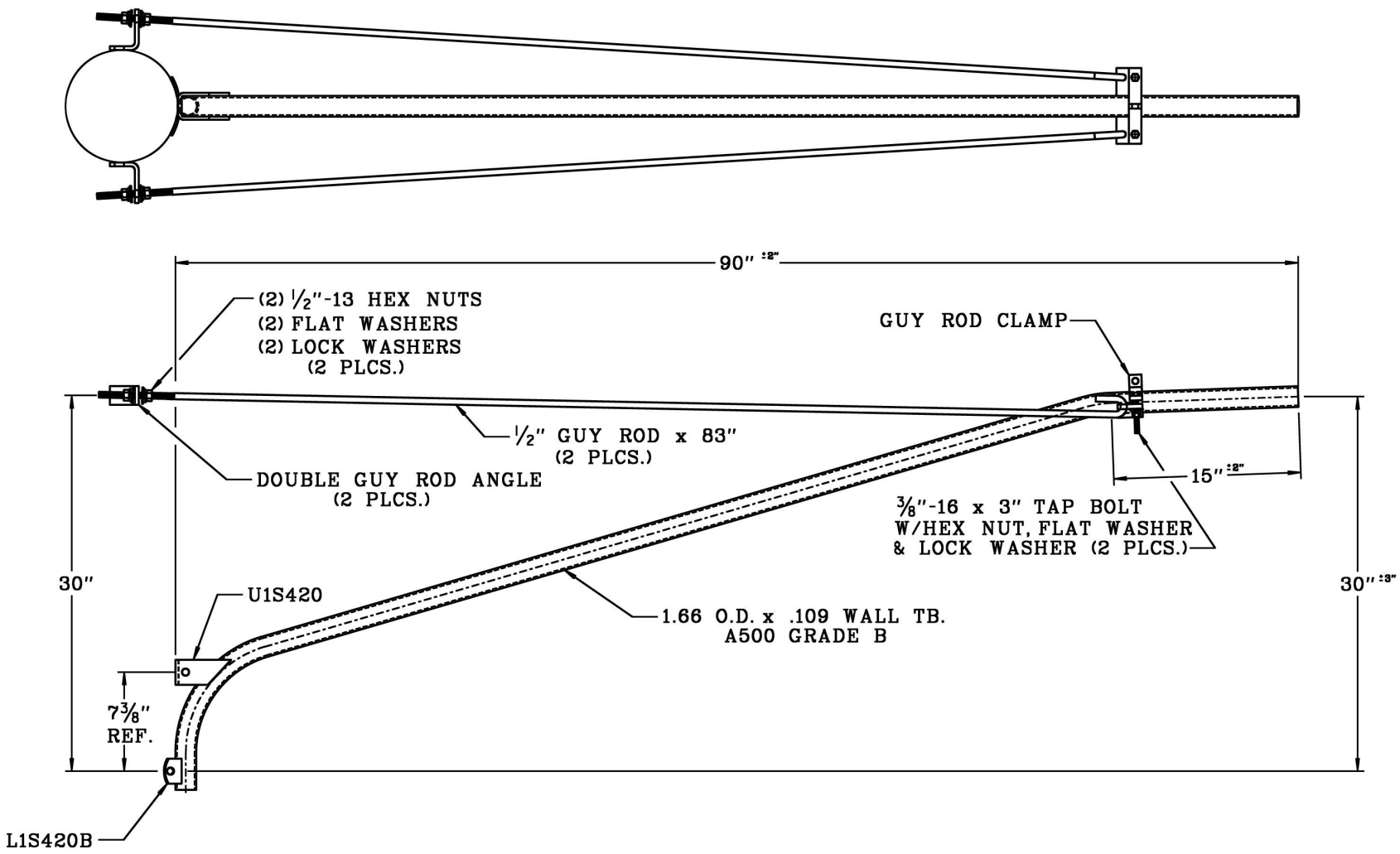

Energy Light Inc. 800 E. Northwest Hwy Palatine, IL 60074